2STX2220

High Gain Low Voltage PNP Power Transistor

General features

- Very low Collector to Emitter saturation voltage
- D.C. Current gain, h_{FE} >100
- 1.5 A continuous collector current
- In compliance with the 2002/93/EC European Directive

Description

The device in a PNP transistor manufactured using new “PB-HDC” (Power Bipolar High Density Current) technology. The resulting transistor shows exceptional high gain performances coupled with very low saturation voltage.

Applications

- Power management in portable equipment
- Switching regulator in battery charger applications

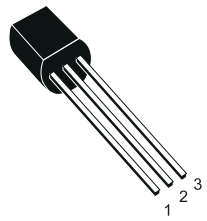

TO-92

Internal schematic diagram

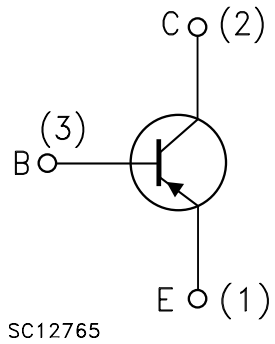

Order codes

Part Number	Marking	Package	Packing
2STX2220	X2220	TO-92	Bulk

Contents

1 Electrical ratings 3

2 Electrical characteristics 4

2.1 Electrical characteristics (curves) 5

2.2 Test circuits 7

3 Package mechanical data 8

4 Revision history 10

1 Electrical ratings

Table 1. Absolute maximum rating

Symbol	Parameter	Value	Unit
V_{CBO}	Collector-base voltage (I_E = 0)	-20	V
V_{CEO}	Collector-emitter voltage (I_B = 0)	-20	V
V_{EBO}	Emitter-base voltage (I_C = 0)	-5	V
I_C	Collector current	-1.5	A
I_{CM}	Collector peak current (t_P < 5ms)	-3	A
I_B	Base current	-0.1	A
I_{BM}	Base peak current (t_P < 5ms)	-0.2	A
P_{tot}	Total dissipation at T_{amb} = 25°C	0.9	W
T_{stg}	Storage temperature	-65 to 150	°C
T_J	Max. operating junction temperature	150	°C

Table 2. Thermal data

Symbol	Parameter		Value	Unit
$R_{thj-case}$	Thermal resistance junction-case	max	44.6	°C/W
$R_{thj-amb}$	Thermal resistance junction-amb	max	139	°C/W

2 Electrical characteristics

(T_{case} = 25°C unless otherwise specified)

Table 3. Electrical characteristics

Symbol	Parameter	Test Conditions	Min.	Typ.	Max.	Unit
I_{CBO}	Collector cut-off current (I_E =0)	V_{CB} = -20V			-0.1	µA
I_{EBO}	Emitter cut-off current (I_C =0)	V_{EB} = -5V			-0.1	µA
$V_{(BR)CEO}$ (2)	Collector-emitter breakdown voltage (I_B = 0)	I_C = -10mA	-20			V
$V_{(BR)EBO}$	Emitter-base breakdown voltage (I_C = 0)	I_E = -100µA	-5			V
$V_{CE(sat)}$ (2)	Collector-emitter saturation voltage	I_C = -0.5A I_B = -50mA I_C = -1.5A I_B = -150mA			-0.25 -0.45	V V
$V_{BE(sat)}$ (2)	Base-emitter saturation voltage	I_C = -0.5A I_B = -50mA I_C = -1.5A I_B = -150mA			-1 -1.1	V V
$V_{BE(on)}$ (2)	Base-emitter on voltage	I_C = -1A V_{CE} = -2V			-1	V
h_{FE} (2)	DC current gain	I_C = -100mA V_{CE} = -2V I_C = -500mA V_{CE} = -2V I_C = -1.5A V_{CE} = -2V I_C = -3A V_{CE} = -2V	200 170 120 75		600	
C_{CBO}	Collector-base capacitance	I_E = 0 V_{CB} = -10V f = 1MHz		30		pF
t_{on} t_{off}	Resistive load Turn-on time Turn-off time	I_C = -1.5A V_{CC} = -10V I_{B1} = -I_{B2} = -150mA		60 250		ns ns

Note (2) Pulsed duration = 300 µs, duty cycle ≤1.5%

2.1 Electrical characteristics (curves)

Figure 1. Output characteristics

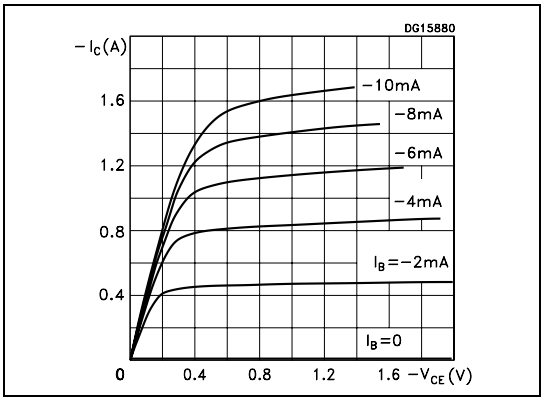

Figure 2. DC current gain

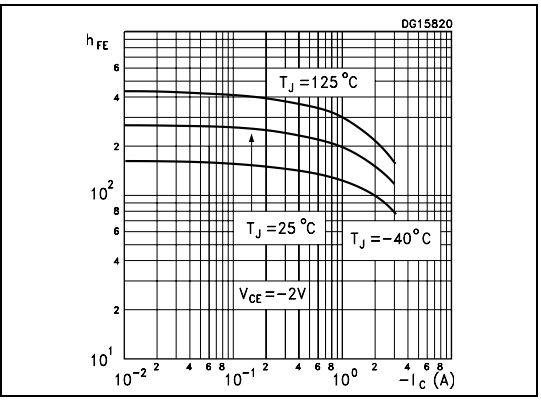

Figure 3. DC current gain

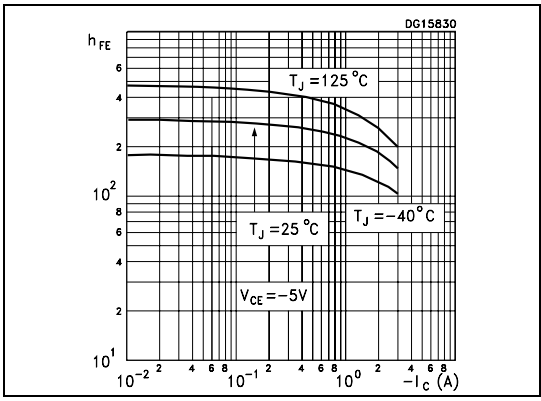

Figure 4. Collector-emitter saturation voltage

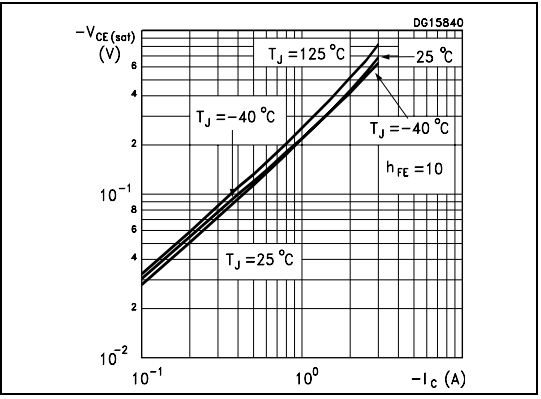

Figure 5. Base-emitter saturation voltage

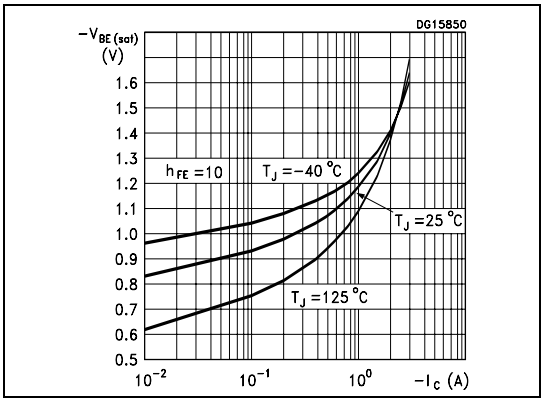

Figure 6. Base-emitter on voltage

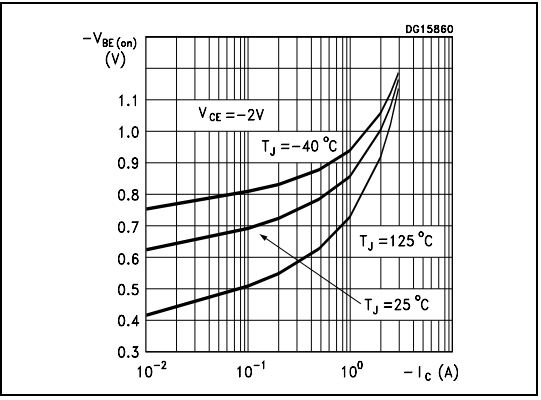

Figure 7. Capacitance curves

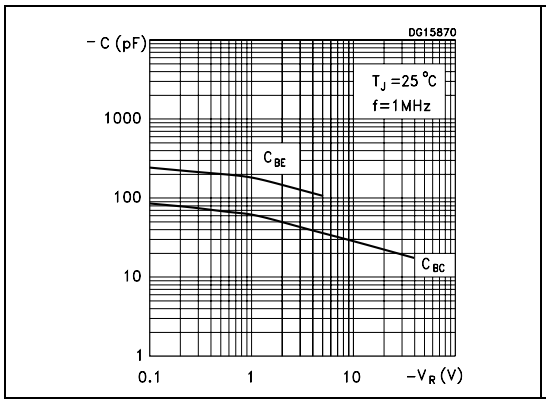

Figure 8. Switching time resistive load

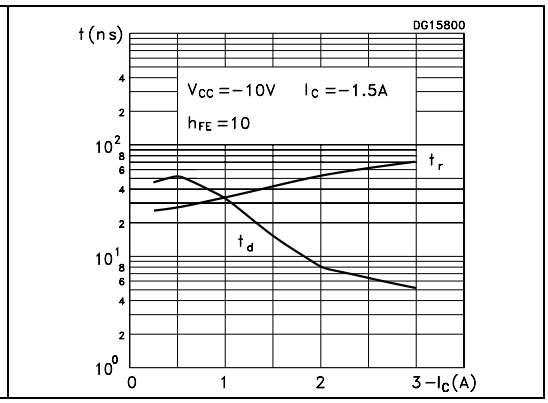

Figure 9. Switching time resistive load

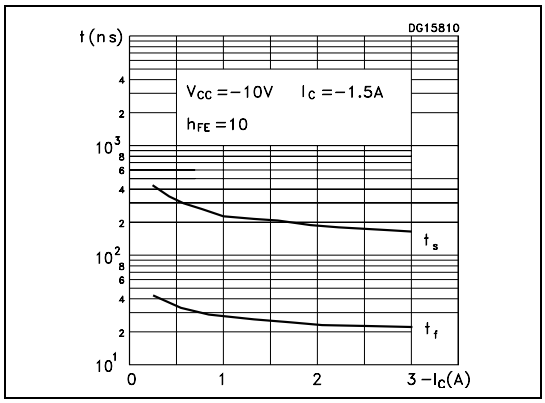

2.2 Test circuits

Figure 10. Resistive load switching test circuit

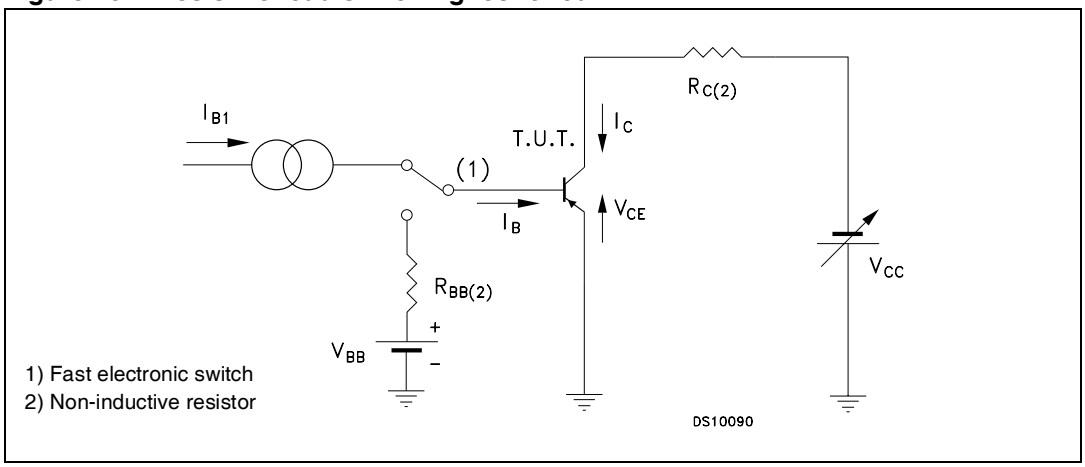

3 Package mechanical data

In order to meet environmental requirements, ST offers these devices in ECOPACK® packages. These packages have a Lead-free second level interconnect. The category of second level interconnect is marked on the package and on the inner box label, in compliance with JEDEC Standard JESD97. The maximum ratings related to soldering conditions are also marked on the inner box label. ECOPACK is an ST trademark. ECOPACK specifications are available at: www.st.com

TO-92 BULK SHIPMENT MECHANICAL DATA

DIM.	mm.		
	MIN.	TYP	MAX.
A	4.32		4.95
b	0.36		0.51
D	4.45		4.95
E	3.30		3.94
e	2.41		2.67
e1	1.14		1.40
L	12.70		15.49
R	2.16		2.41
S1	0.92		1.52
W	0.41		0.56
V		5°	

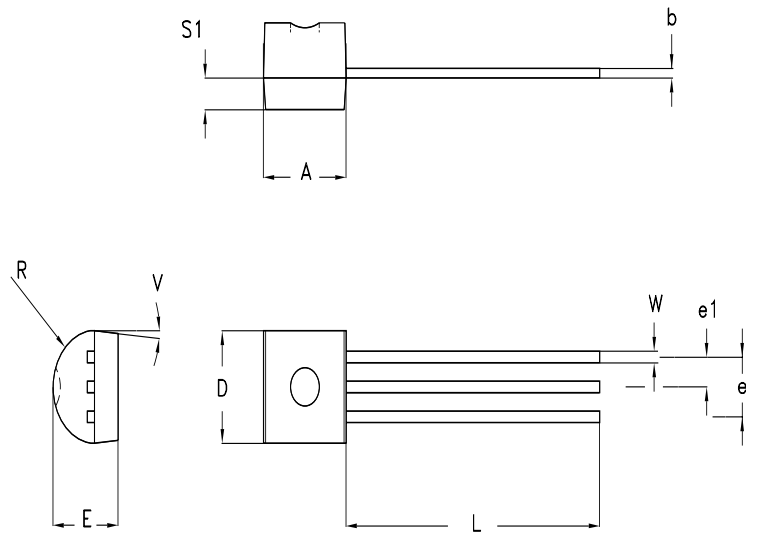

4 Revision history

Table 4. Revision history

Date	Revision	Changes
19-Jun-2006	1	Initial release.
25-Sep-2006	2	New maturity code.

Please Read Carefully:

Information in this document is provided solely in connection with ST products. STMicroelectronics NV and its subsidiaries (“ST”) reserve the right to make changes, corrections, modifications or improvements, to this document, and the products and services described herein at any time, without notice.

All ST products are sold pursuant to ST’s terms and conditions of sale.

Purchasers are solely responsible for the choice, selection and use of the ST products and services described herein, and ST assumes no liability whatsoever relating to the choice, selection or use of the ST products and services described herein.

No license, express or implied, by estoppel or otherwise, to any intellectual property rights is granted under this document. If any part of this document refers to any third party products or services it shall not be deemed a license grant by ST for the use of such third party products or services, or any intellectual property contained therein or considered as a warranty covering the use in any manner whatsoever of such third party products or services or any intellectual property contained therein.

UNLESS OTHERWISE SET FORTH IN ST’S TERMS AND CONDITIONS OF SALE ST DISCLAIMS ANY EXPRESS OR IMPLIED WARRANTY WITH RESPECT TO THE USE AND/OR SALE OF ST PRODUCTS INCLUDING WITHOUT LIMITATION IMPLIED WARRANTIES OF MERCHANTABILITY, FITNESS FOR A PARTICULAR PURPOSE (AND THEIR EQUIVALENTS UNDER THE LAWS OF ANY JURISDICTION), OR INFRINGEMENT OF ANY PATENT, COPYRIGHT OR OTHER INTELLECTUAL PROPERTY RIGHT.

UNLESS EXPRESSLY APPROVED IN WRITING BY AN AUTHORIZE REPRESENTATIVE OF ST, ST PRODUCTS ARE NOT DESIGNED, AUTHORIZED OR WARRANTED FOR USE IN MILITARY, AIR CRAFT, SPACE, LIFE SAVING, OR LIFE SUSTAINING APPLICATIONS, NOR IN PRODUCTS OR SYSTEMS, WHERE FAILURE OR MALFUNCTION MAY RESULT IN PERSONAL INJURY, DEATH, OR SEVERE PROPERTY OR ENVIRONMENTAL DAMAGE.

Resale of ST products with provisions different from the statements and/or technical features set forth in this document shall immediately void any warranty granted by ST for the ST product or service described herein and shall not create or extend in any manner whatsoever, any liability of ST.

ST and the ST logo are trademarks or registered trademarks of ST in various countries.

Information in this document supersedes and replaces all information previously supplied.

The ST logo is a registered trademark of STMicroelectronics. All other names are the property of their respective owners.

© 2006 STMicroelectronics - All rights reserved

STMicroelectronics group of companies

Australia - Belgium - Brazil - Canada - China - Czech Republic - Finland - France - Germany - Hong Kong - India - Israel - Italy - Japan - Malaysia - Malta - Morocco - Singapore - Spain - Sweden - Switzerland - United Kingdom - United States of America

www.st.com